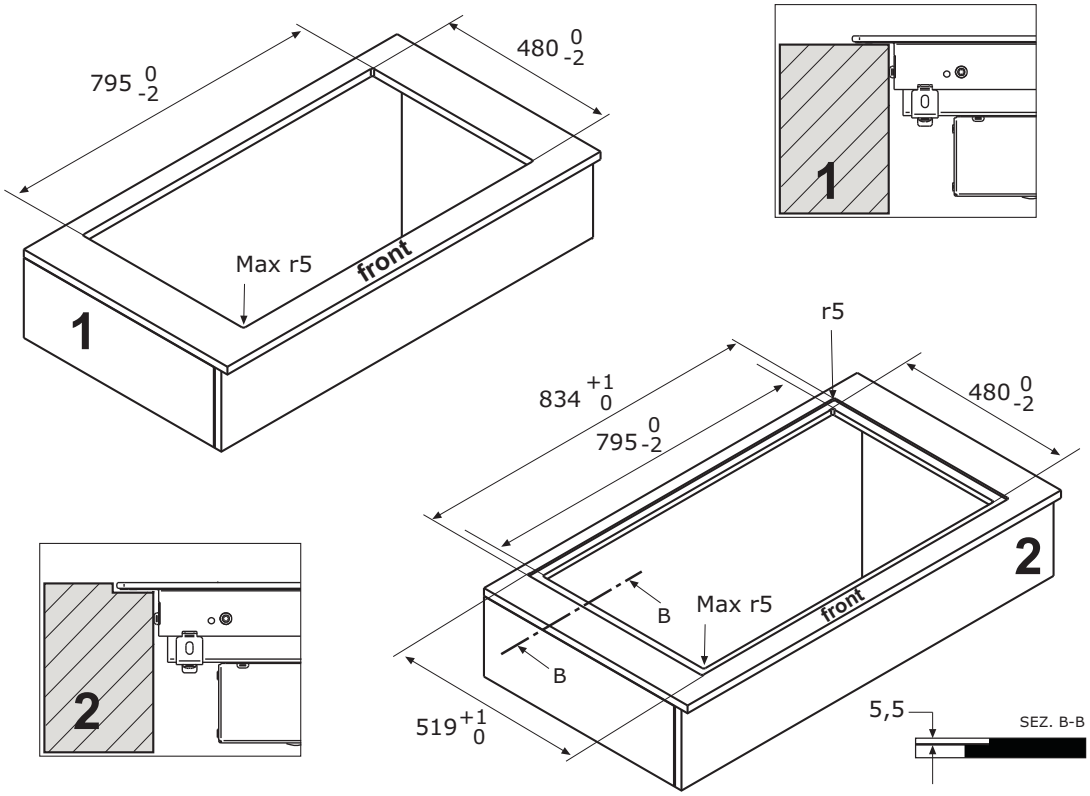
795 0 -2
480 0 -2
Max r5
front
1
1
r5
834 +1 0
795 0 -2
480 0 -2
2
B
Max r5
front
B
2
519 +1 0
5,5
SEZ. B-B